TECHNICAL BULLETIN	DOCUMENT ID
Daytona Championship USA	DYTSU20171204

Software Update Installation

This is a step by step guide on how to install the software update to your Daytona Championship USA arcade cabinets. This manual will explain how to safely access the game board and install the feature on both the game and the billboard screen.

Please read the contents of this bulletin in its entirety and action accordingly.

IMPORTANT

AFTER INSTALLATION CHECK THE "SYSTEM INFORMATION" SECTION OF THE TEST MENU AND ENSURE ALL VERSION NUMBERS HAVE BEEN UPDATED. THESE UPDATES MUST BE APPLIED TO ALL CABINETS.

1 This will first explain how to update the Billboard computer. Switch power OFF to Cabinet.

2 Remove the (4) securing screws from Billboard compartment panel (as detailed below).

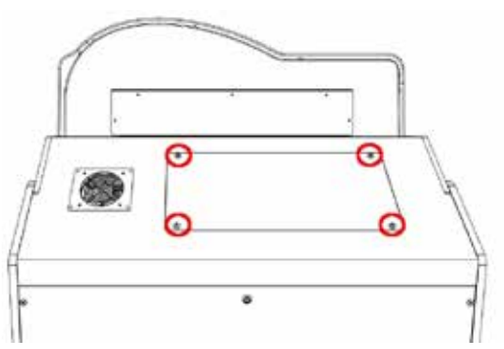

3 After removing the cover, observe the Billboard computer.

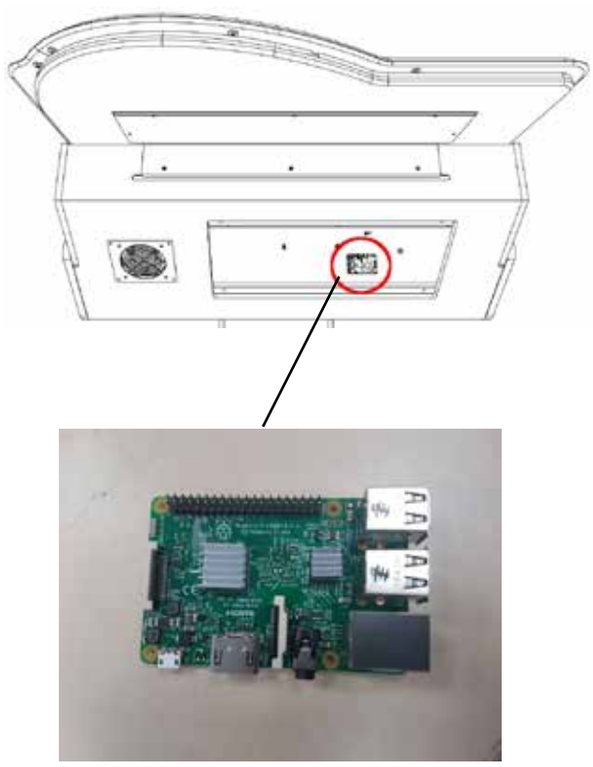

4 Insert the USB stick with the Party Mode update on in to one of the available USB slots (If using your own USB stick it must be between 8-16GB formatted to FAT32 USB). Switch power ON to Cabinet. The Billboard will then begin updating upon powering up. Note: The same USB can be used to update Billboard and gameboard as long as the format of the stick is correct.

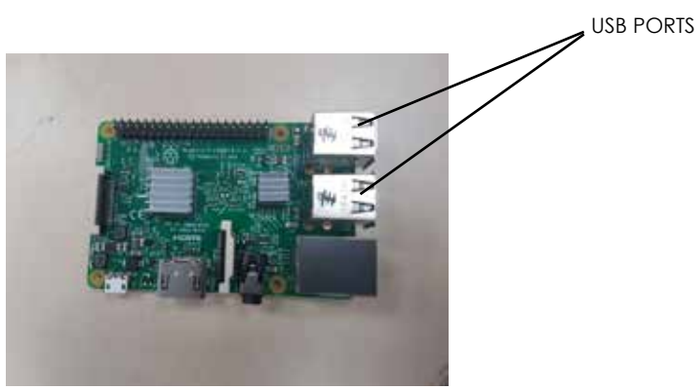

5 While the Billboard is updating, the current version number will appear on the screen along with the file transfer sequence. Once the update is finished, the SEGA PLEASE WAIT screen will appear (see image below). It is now safe to remove the USB. Removing the USB before seeing this screen will result in the update not being completed.

6 Once this is all complete, make sure all components are secure and replace cover and fixings to the cabinet. Ensuring all fixings are fastened, but not excessively tightened.

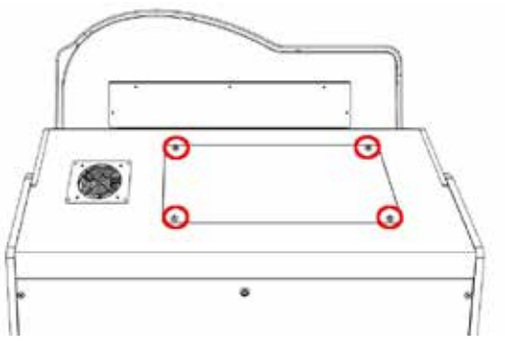

7 Switch power to Cabinet OFF

8 This will explain how to install the Game and Shell updates. Locate and remove the cover and fixings for the Game board (as seen below).

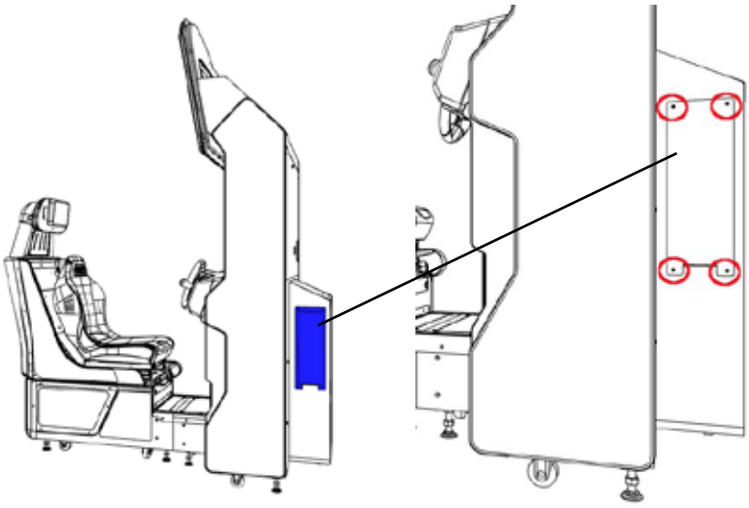

9 After removing the cover, you will find the Game board inside. The back of the Game board will look like the image below. Insert the USB with the Game and Shell update in to one of the highlighted USB ports. Switch power ON with USBs inserted.

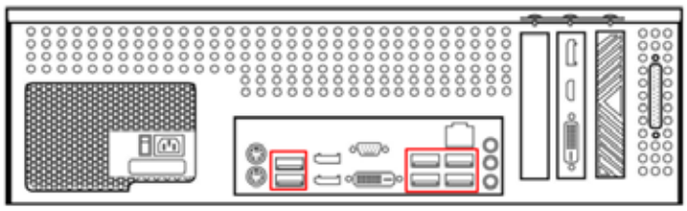

10 When starting back up, the game should begin updating the Game and Shell. The first update screen for the Shell should look like the left image. The Game update will look like the right image.

11 After the update finishes, the game should start normally. All updates should now be installed but this should be verified by entering the Test Menu

12 Remove USB Stick and reapply Game board cover and ensure fixings are tightened.

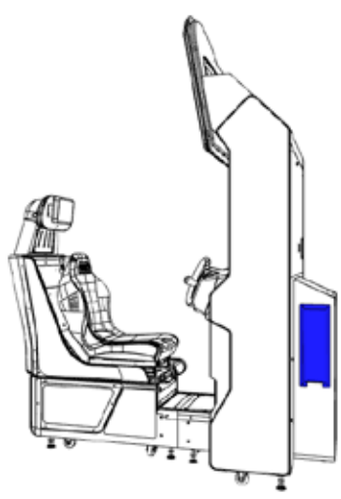

13 When you believe all updates to be complete, enter Test Mode while the Game is running. The Billboard will also enter Test Mode. The version numbers on the billboard should match the image below. If this is not the case, the Billboard has not updated correctly. Be sure to make this check on each individual Cabinet to ensure all have updated correctly

14 To ensure the Game and Shell have updated correctly, enter the SYSTEM INFORMATION option of the Test Menu. The "Game Version" and "Shell Version" should match the image below. If this is not the case, the Game/Shell have not updated correctly. Refer to the image below on where to find these version numbers.

STOP IMPORTANT

AFTER APPLYING THE UPDATE TO ALL CABINETS, A FULL POWER CYCLE OF ALL LINKED CABINETS IS REQUIRED